"80" / "90"

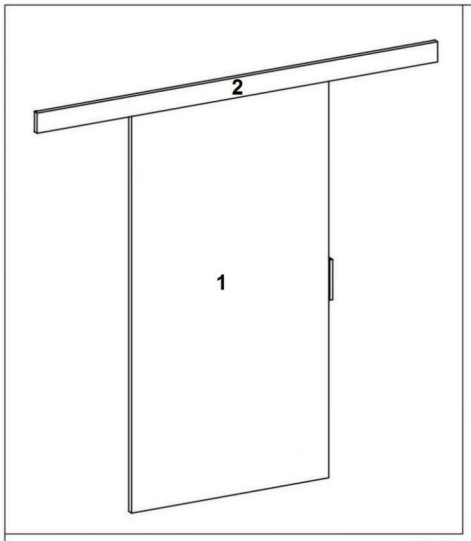

4.0x16mm	4.0x37mm			
C	D	F	G	H
14	4	1	2	2
I	J	K		
3	4	3		
L	M	N		
1	2	2		

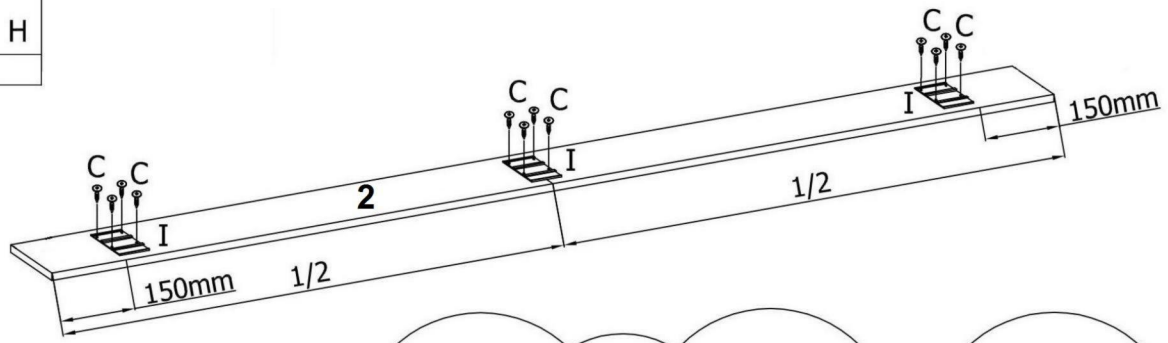

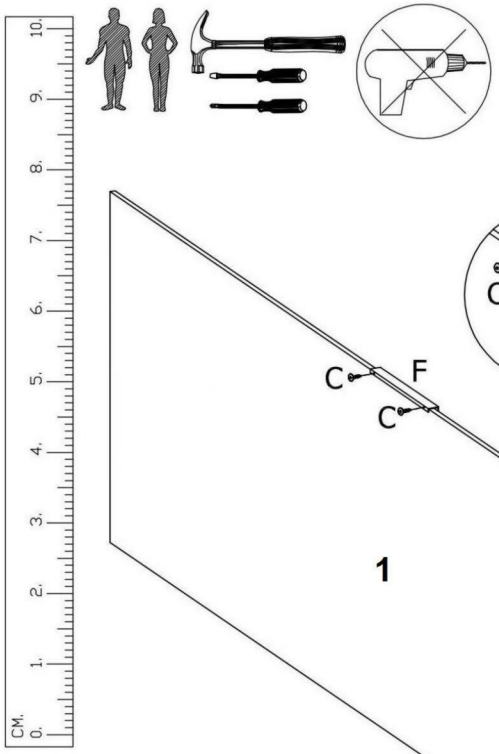

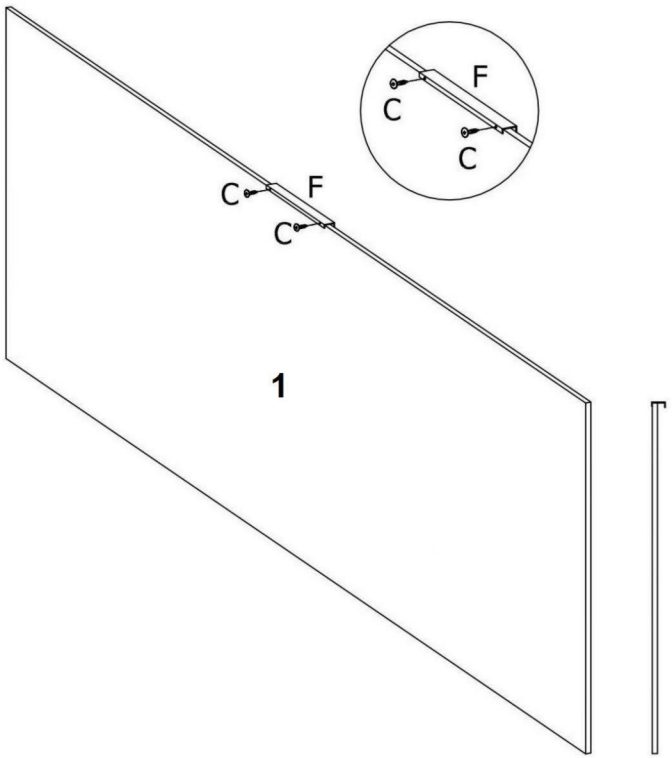

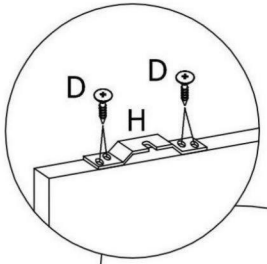

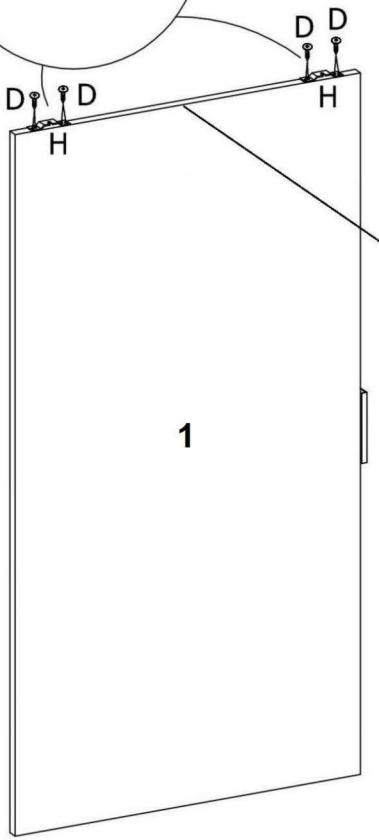

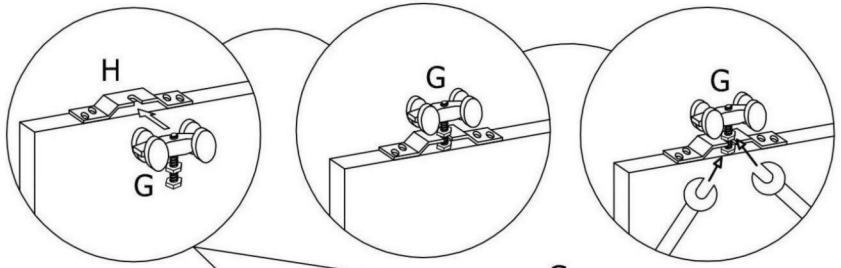

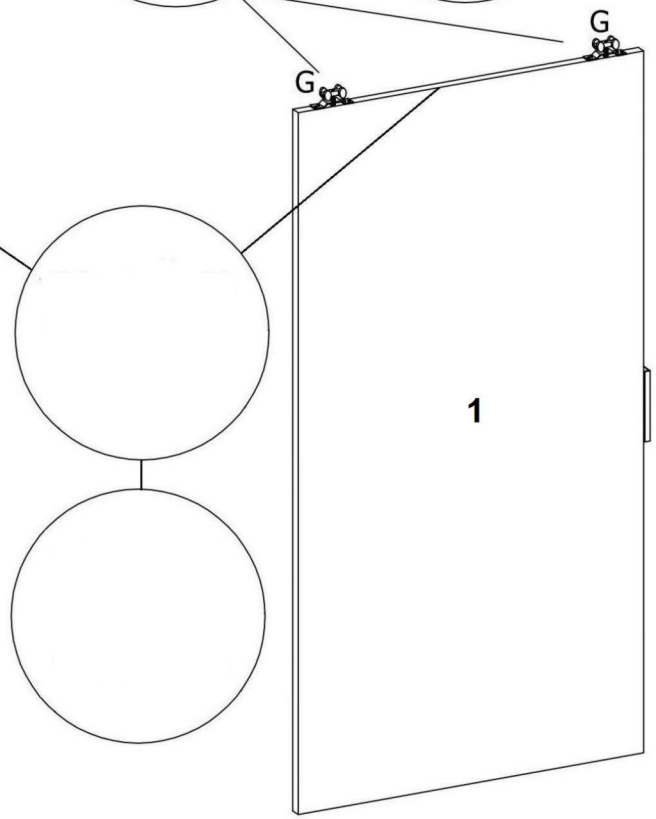

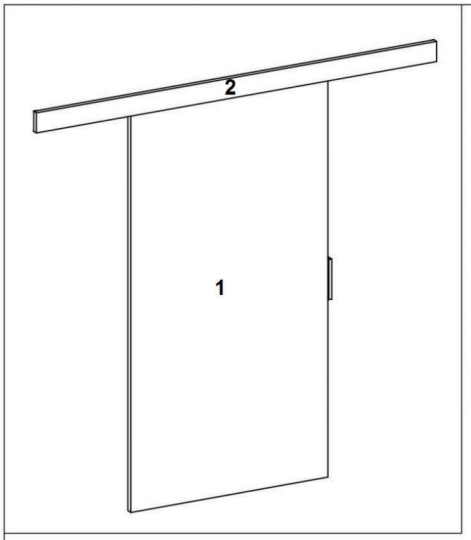
2
1

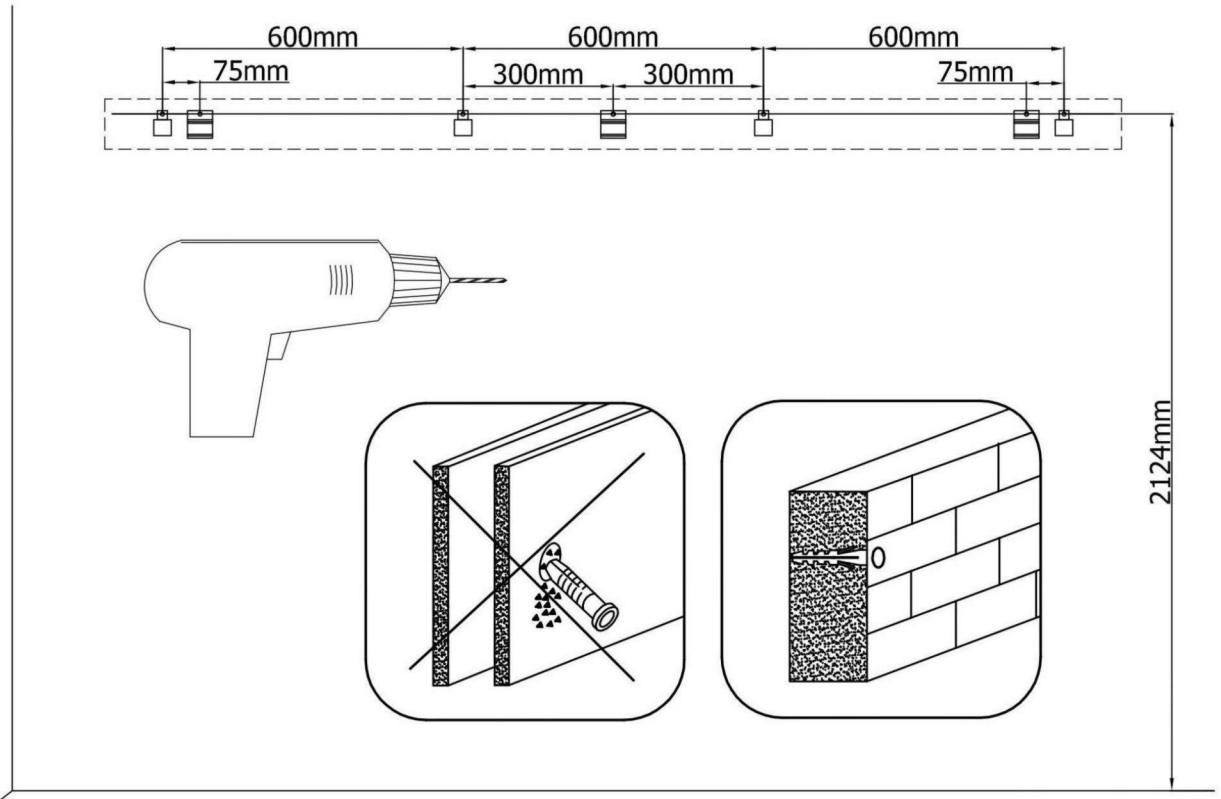
600mm
600mm
600mm
75mm
300mm
300mm
75mm
2124mm

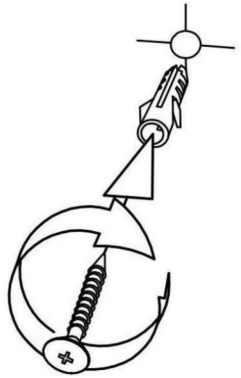

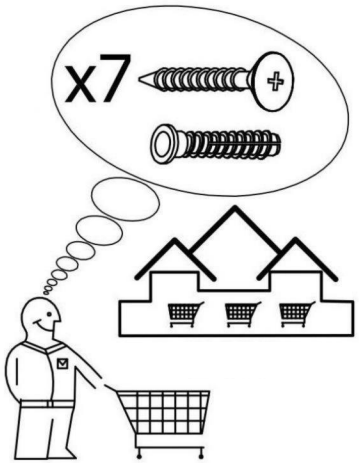
x7

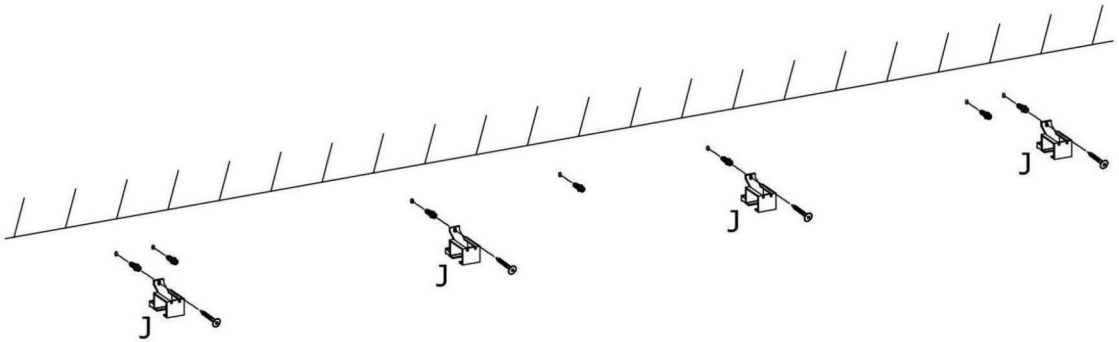
J
J
J
J

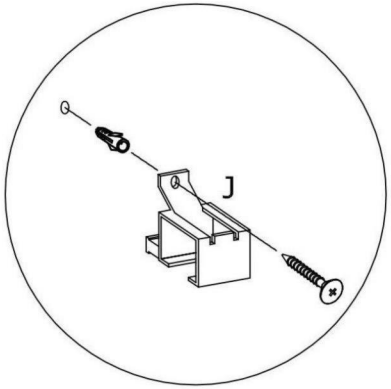
J

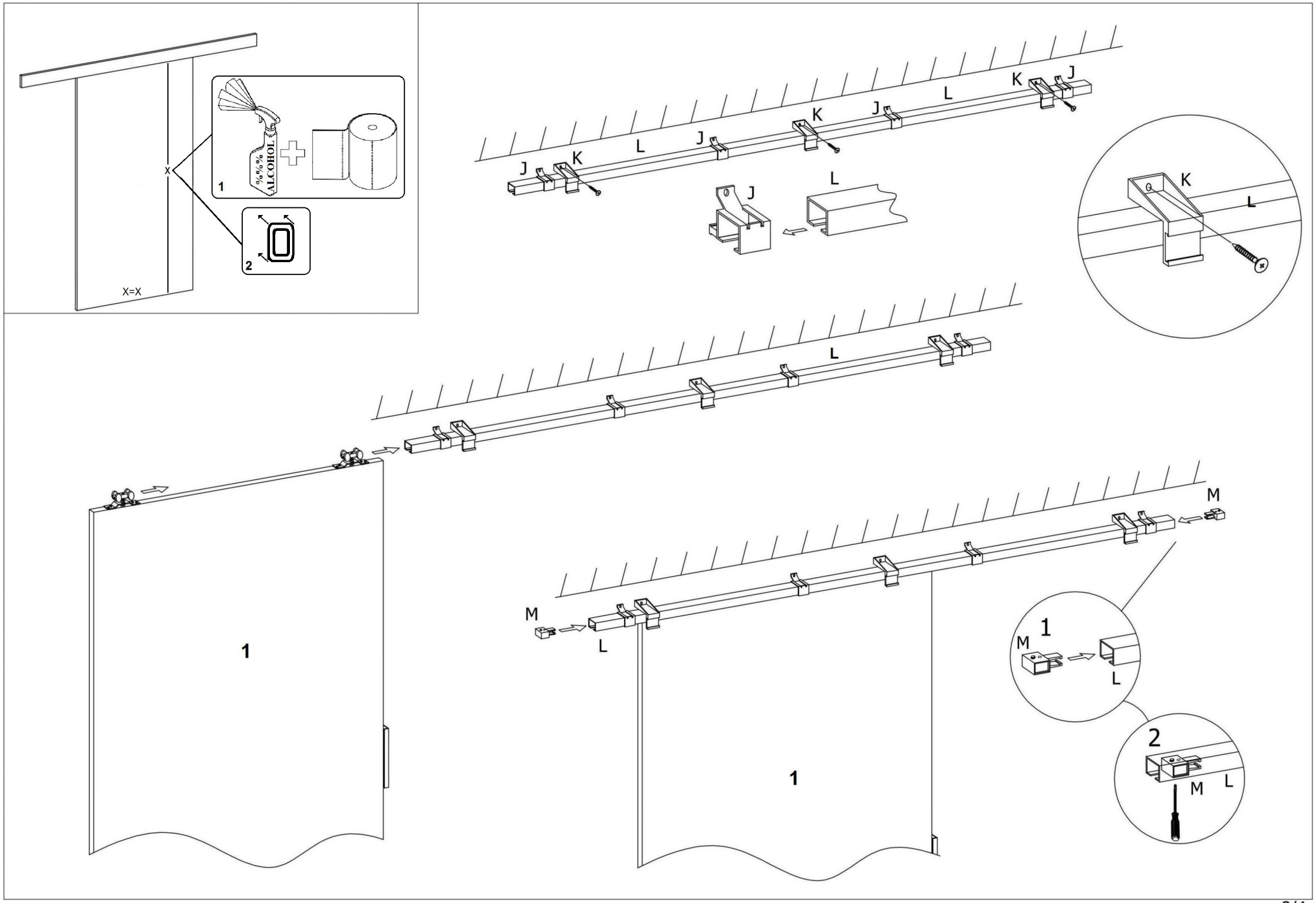
X
X=X
1
%%%
ALCOHOL
2
J
K
L
M
1

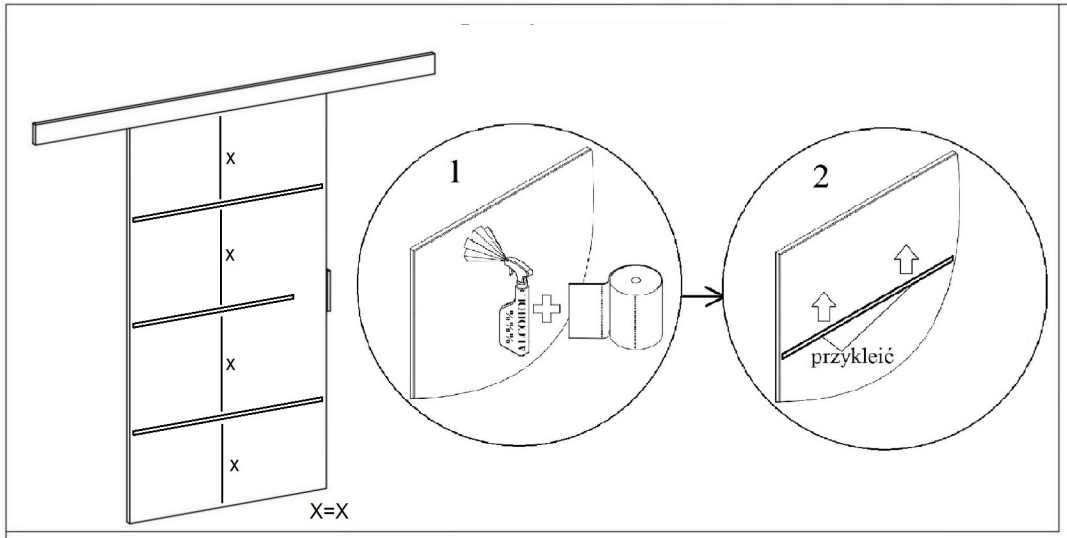
x
x
x
x
X=X
1
2
przykleić

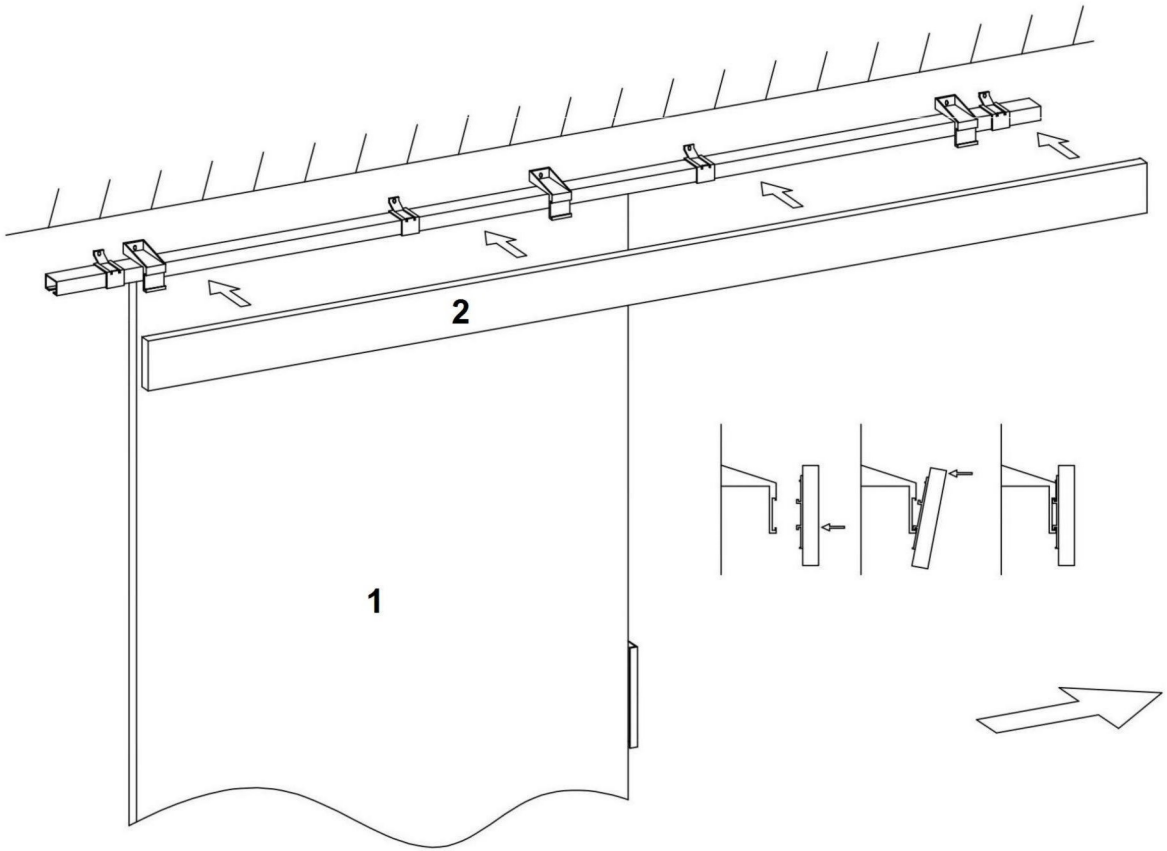
2
1

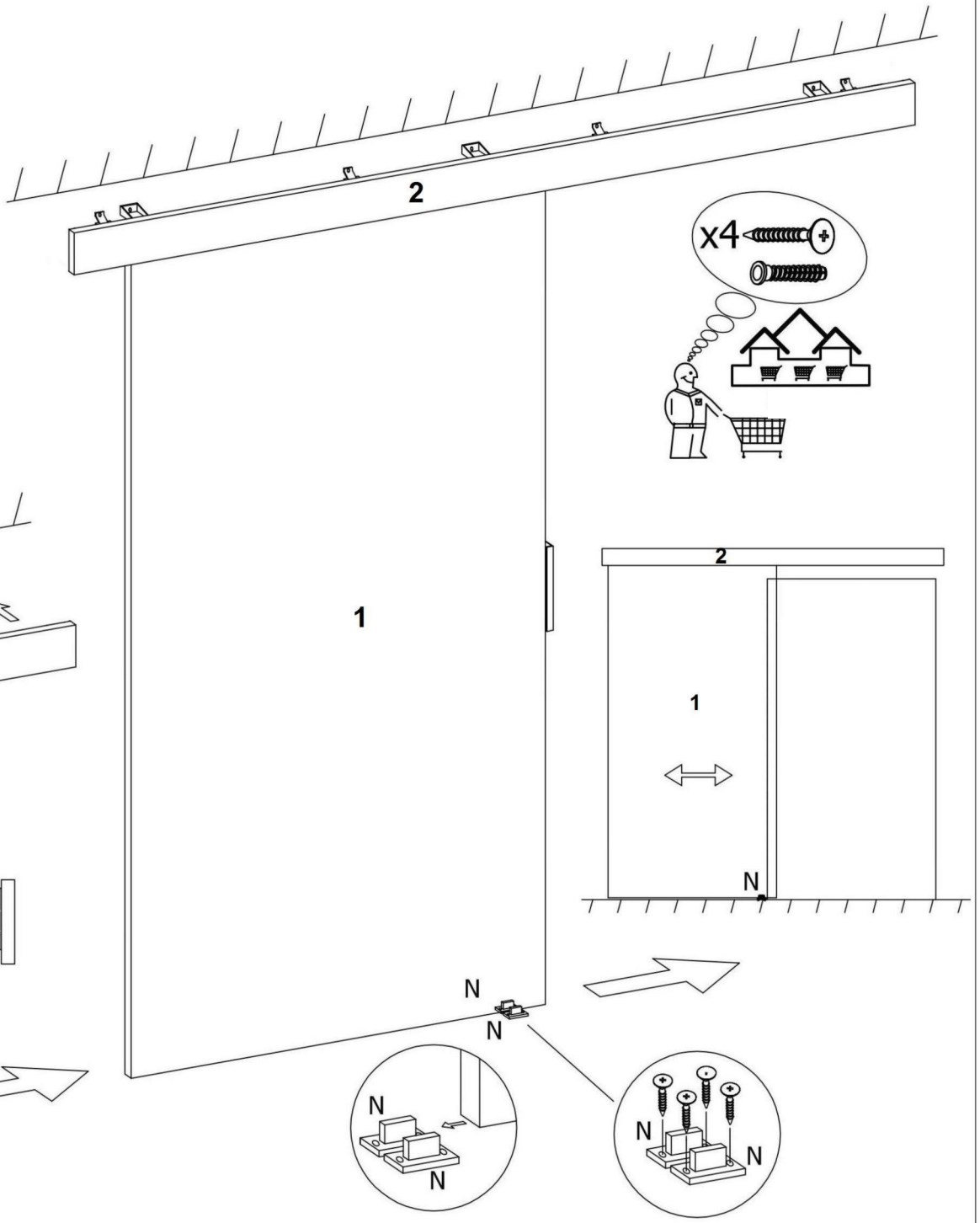
2
x4
1
2
1
N
N
N
N
N
N
N