# 120, 150, 180

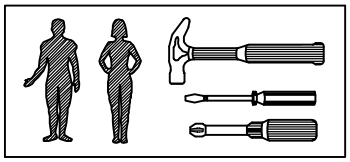

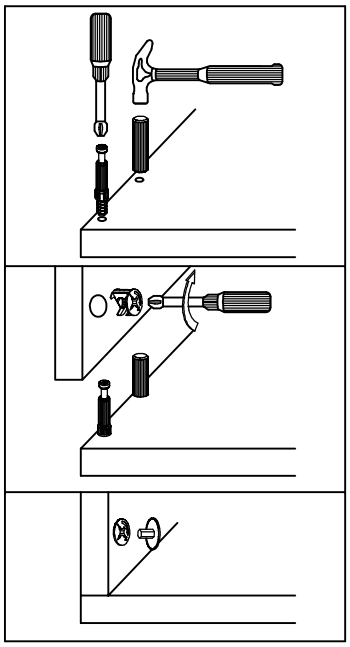

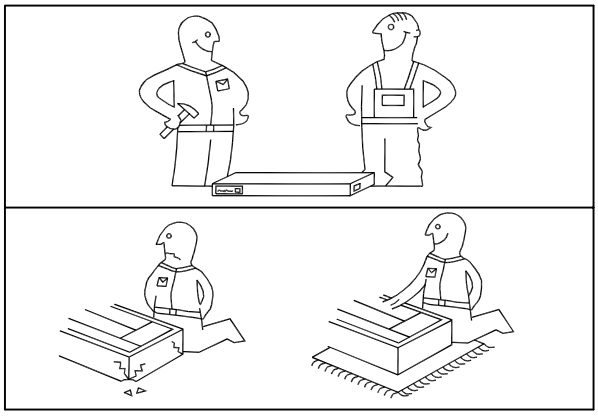

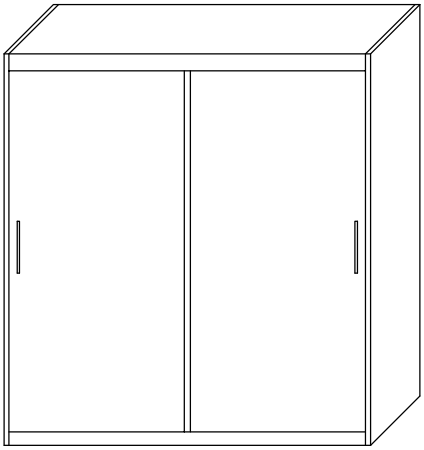

| nr | Szafa 180 | Szafa 150 | Szafa 120 |
|---|---|---|---|
| 1 | 2150 x 581 | 2000 x 581 | 2000 x 581 |
| 2 | 2150 x 581 | 2000 x 581 | 2000 x 581 |
| 3 | 1768 x 581 | 1468 x 581 | 1168 x 581 |
| 4 | 1768 x 565 | 1468 x 565 | 1168 x 565 |
| 5 | 1644 x 475 | 1494 x 475 | 1494 x 475 |
| 6 | 1768 x 475 | 1468 x 475 | 1168 x 475 |
| 7 | 876 x 475 | 726 x 475 | 576 x 475 |
| 7A | 876 x 475 | 726 x 475 | 575 x 475 |
| 8 | 357 x 475 | 357 x 475 | 357 x 475 |
| 9 | 1768 x 100 | 1468 x 100 | 1168 x 100 |
| 10 | 1768 x 72 | 1468 x 72 | 1168 x 72 |
| 11 | 2000 x 940 | 1859 x 750 | 1859 x 600 |
| 12 | 2040 x 900 | 1895 x 748 | 1895 x 598 |

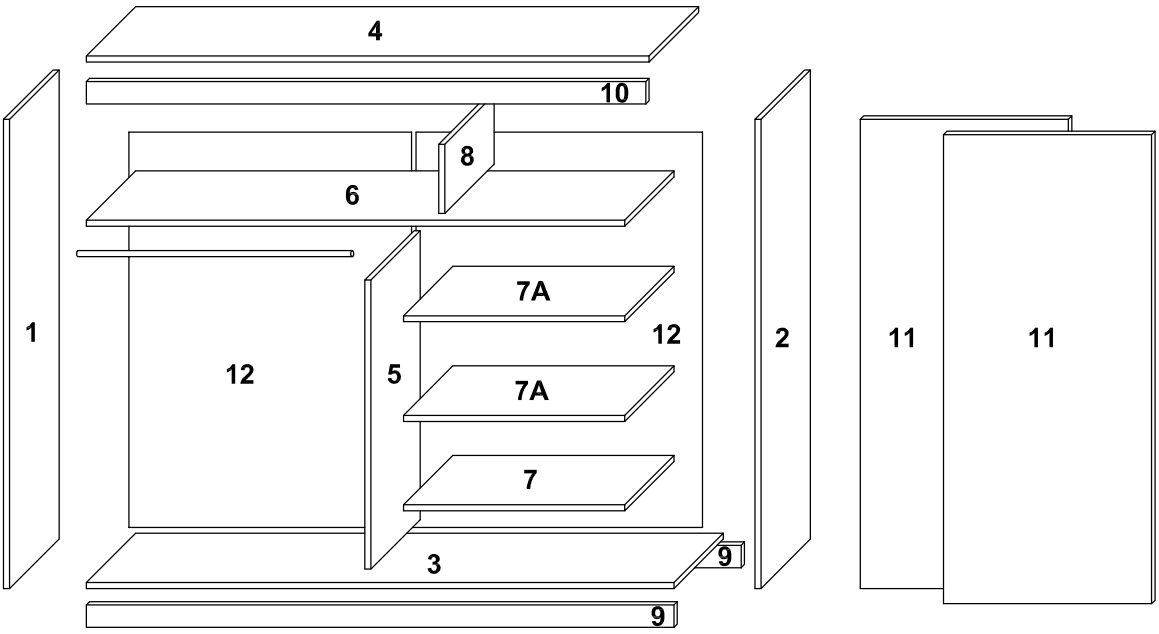


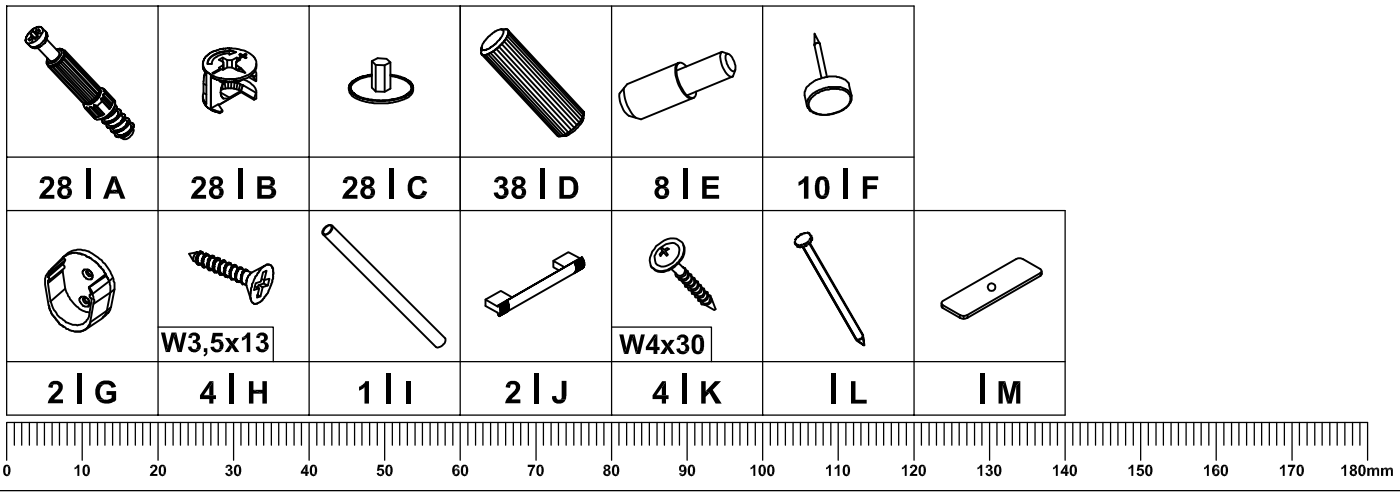

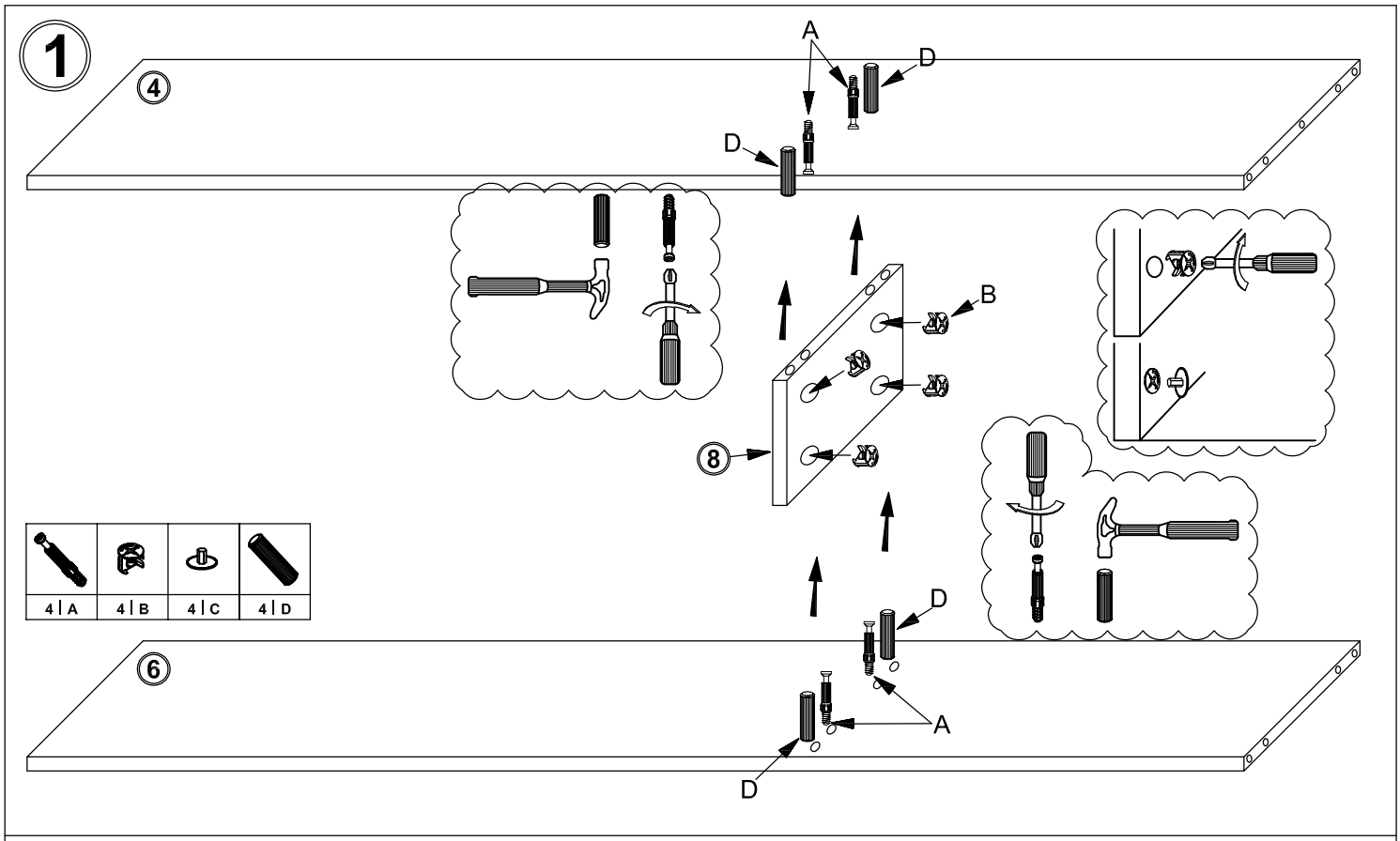
1
4
A
D
D
B
8
D
6
A
D
4 | A
4 | B
4 | C
4 | D

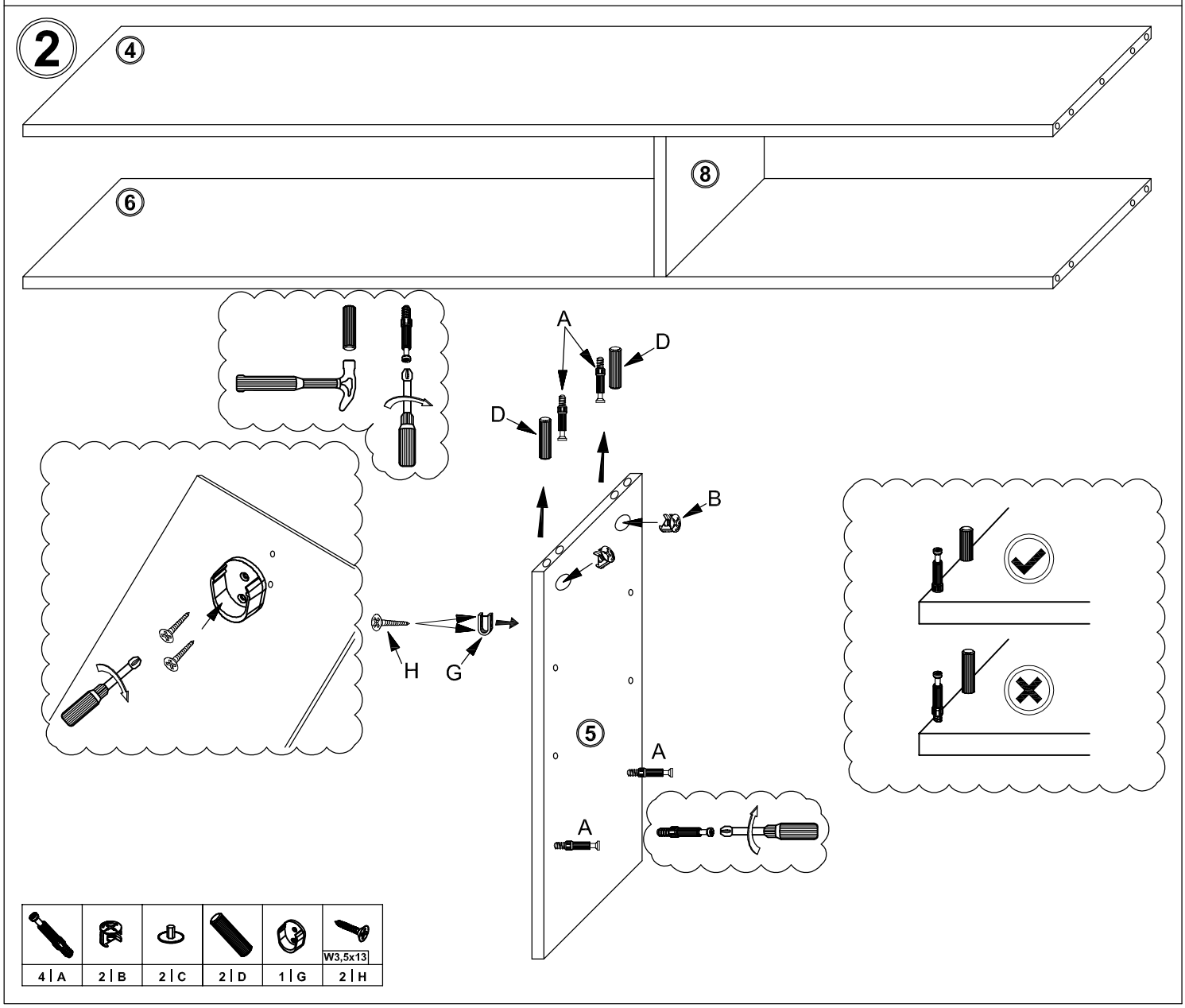
2
4
8
6
A
D
D
B
H
G
5
A
A
4 | A
2 | B
2 | C
2 | D
1 | G
W3,5x13
2 | H

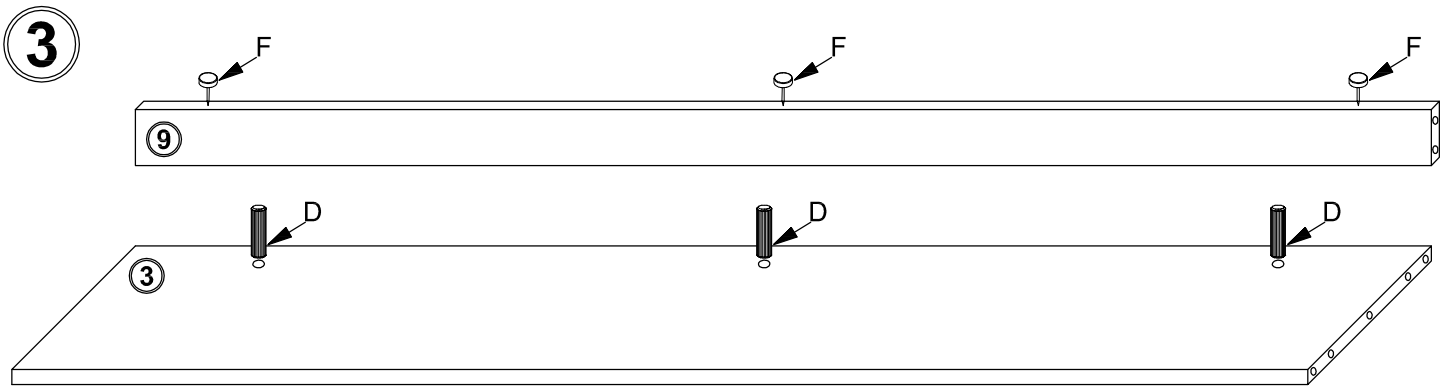
3
F
F
F
9
D
D
D
3

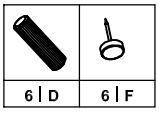
6 | D
6 | F

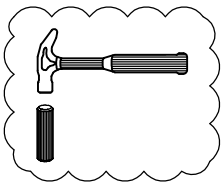

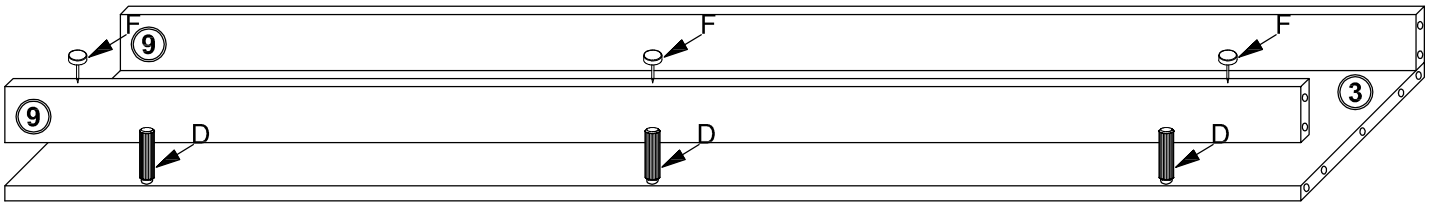
F
9
F
F
3
9
D
D
D

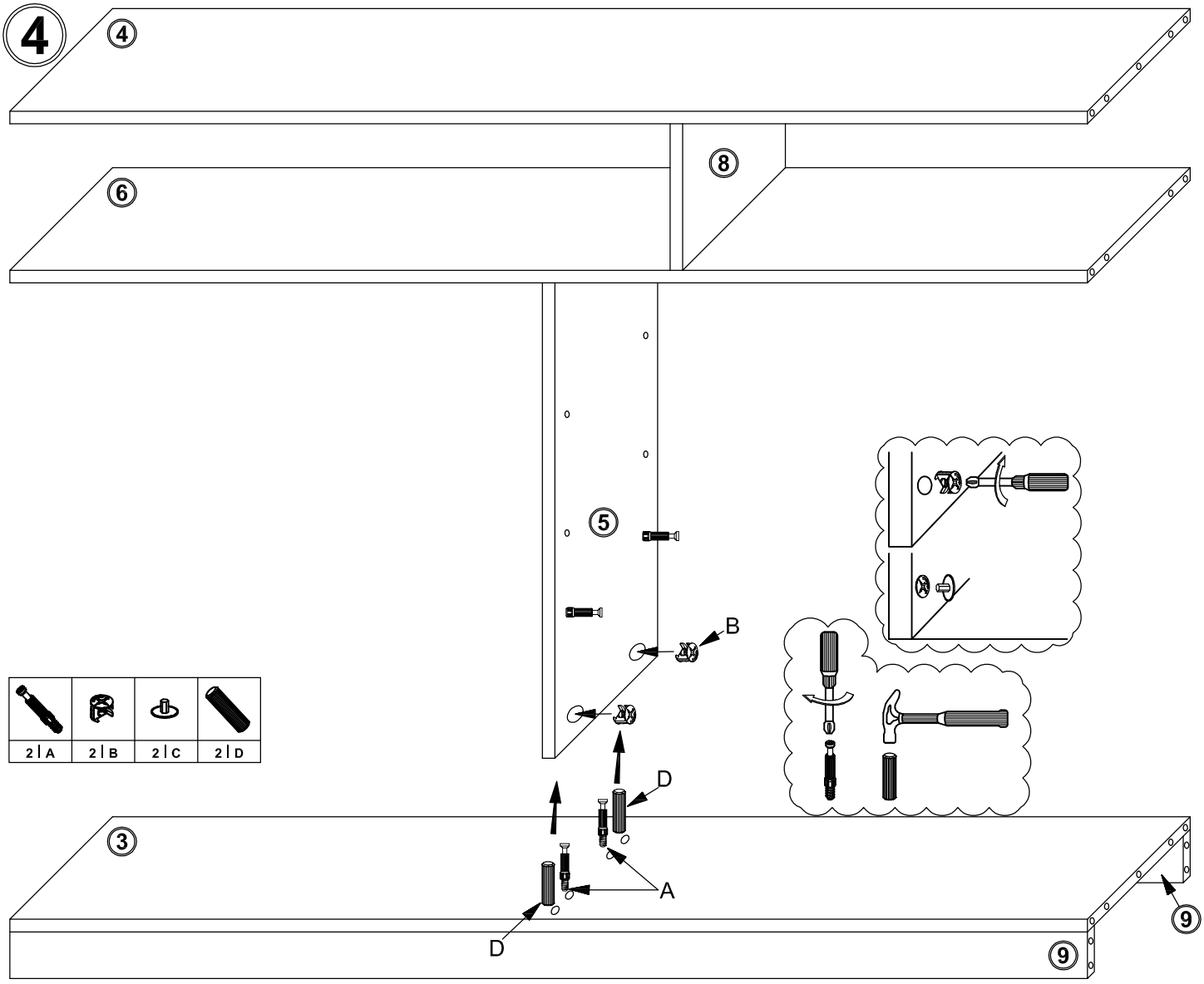
4
4
8
6
5
B
D
3
A
D
9
9


2 | A
2 | B
2 | C
2 | D

5

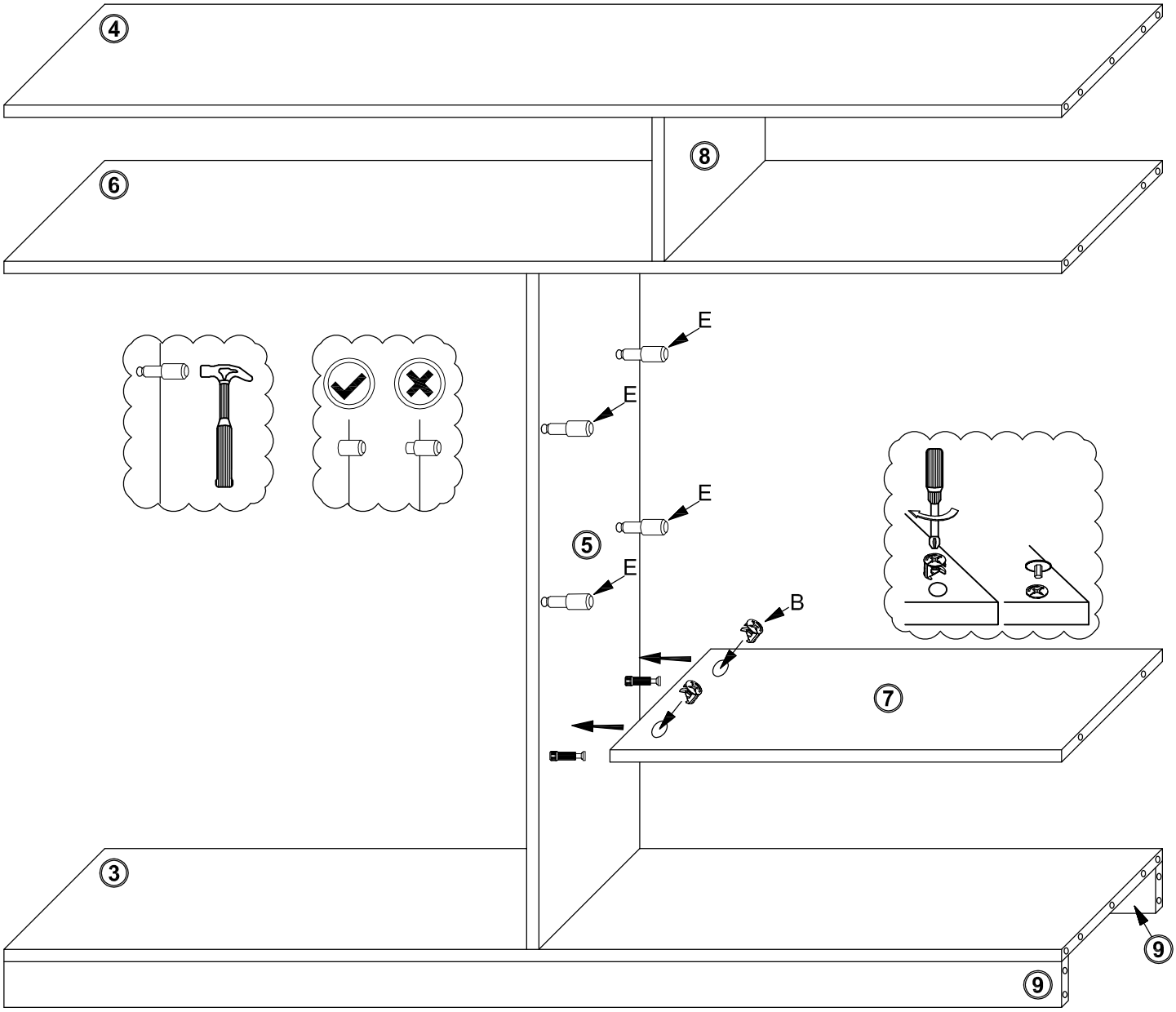


| | | |
|---|---|---|
| 2 \| B | 2 \| C | 4 \| E |

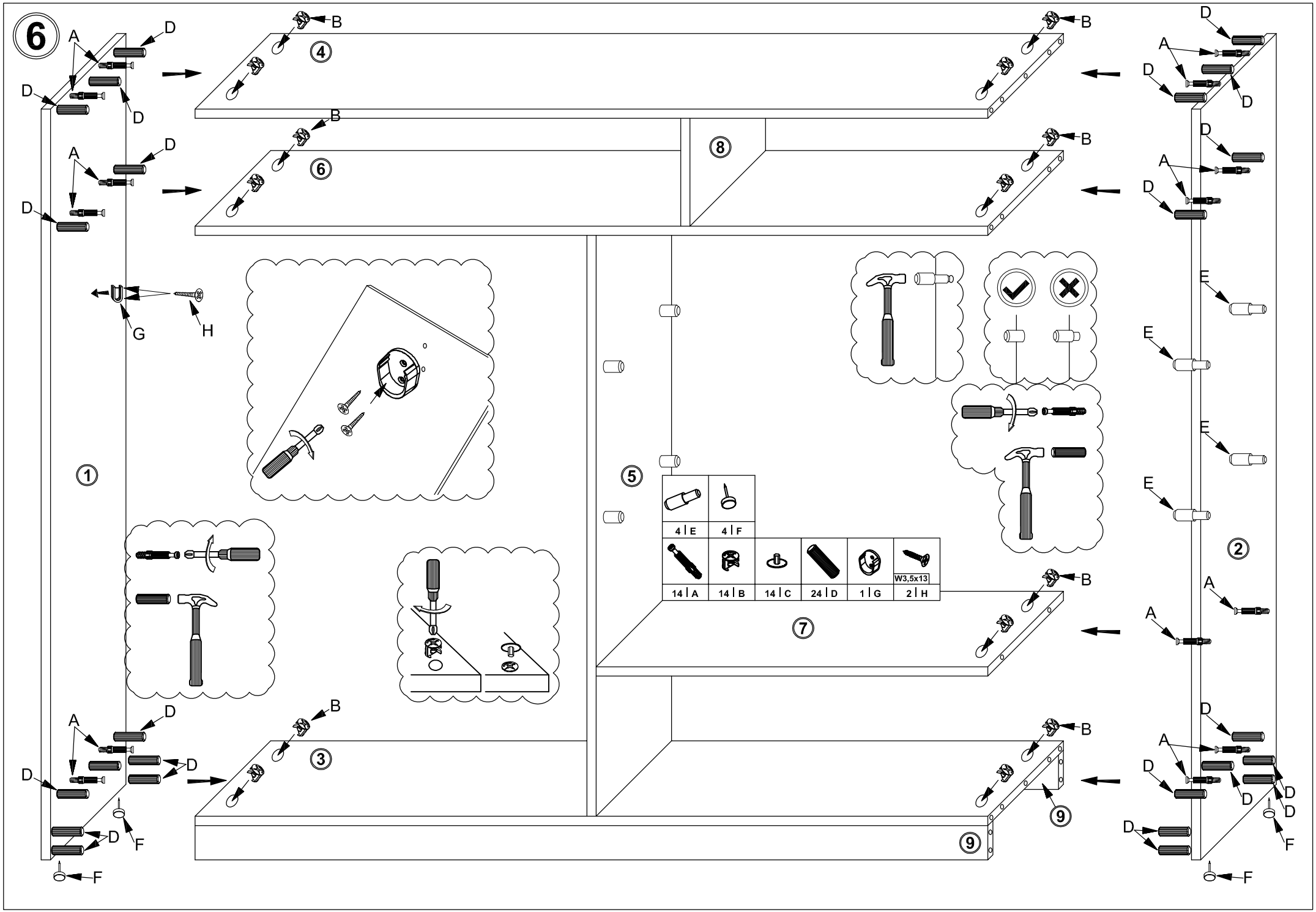
6
A
B
D
E
F
G
H
1
2
3
4
5
6
7
8
9
4 | E
4 | F
14 | A
14 | B
14 | C
24 | D
1 | G
2 | H
W3,5x13

7

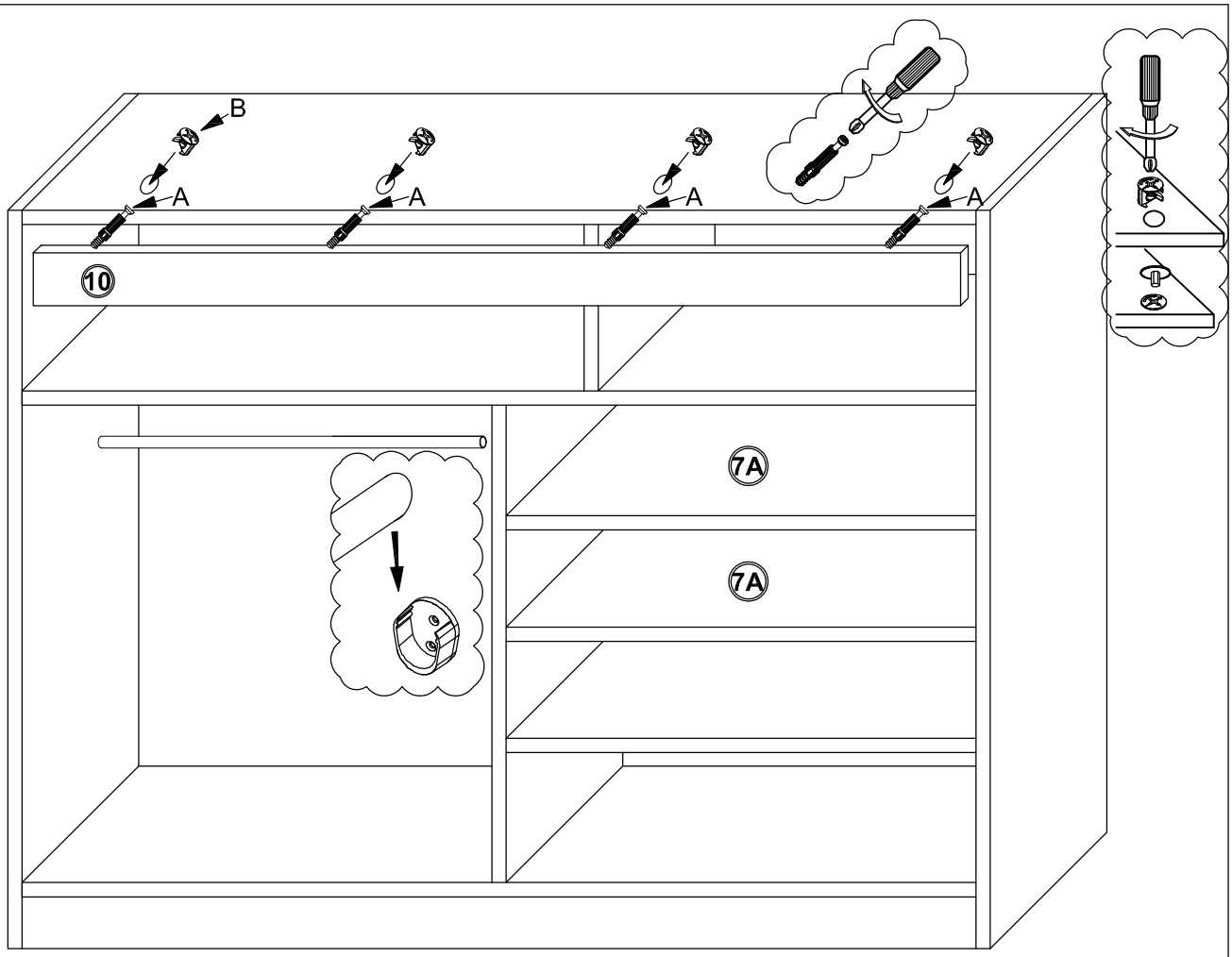

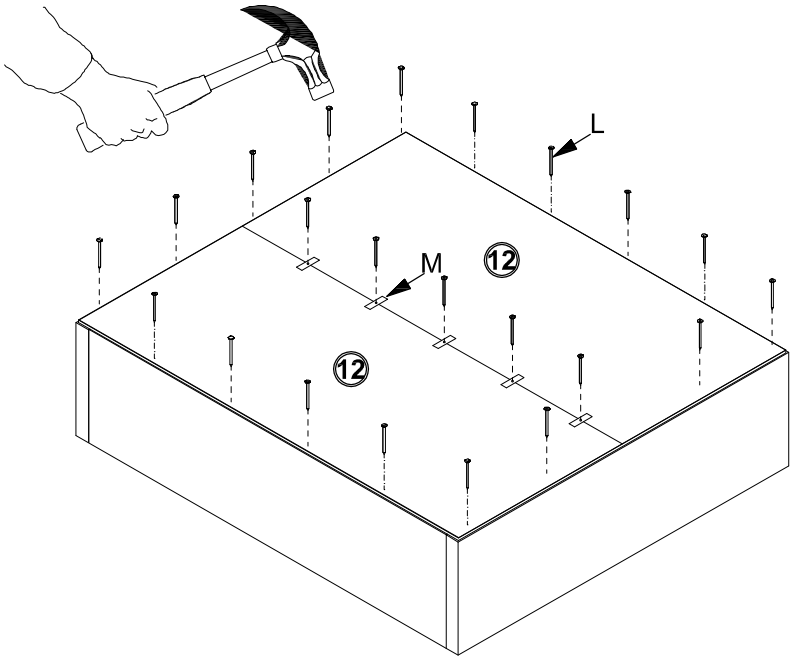


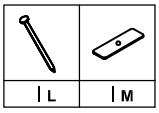


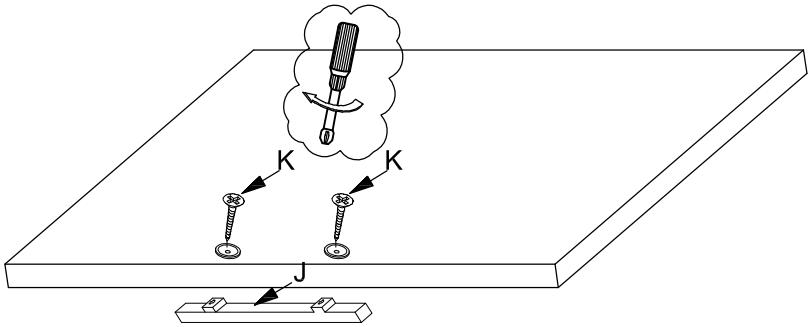


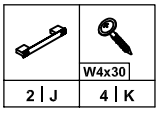

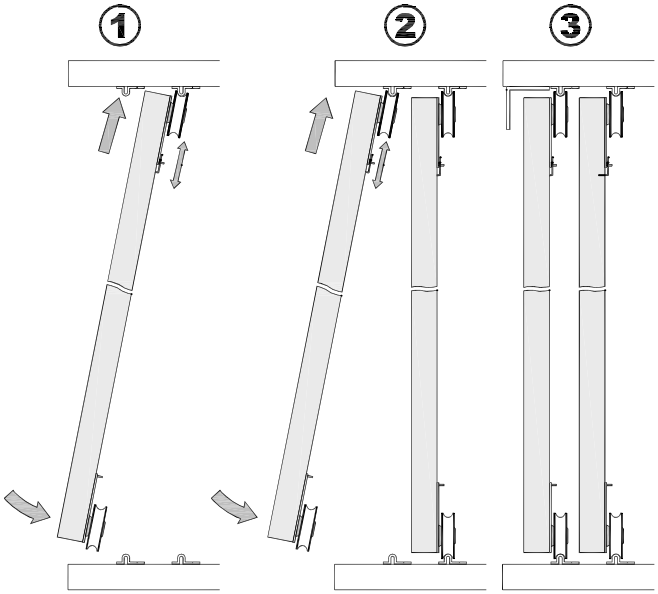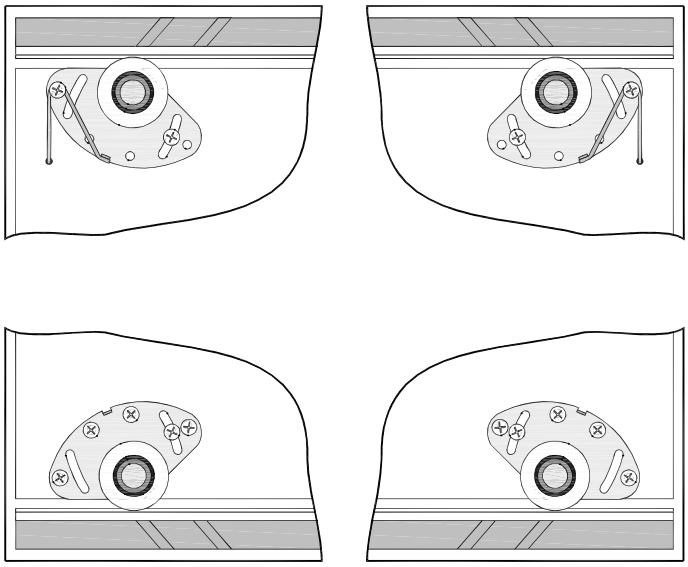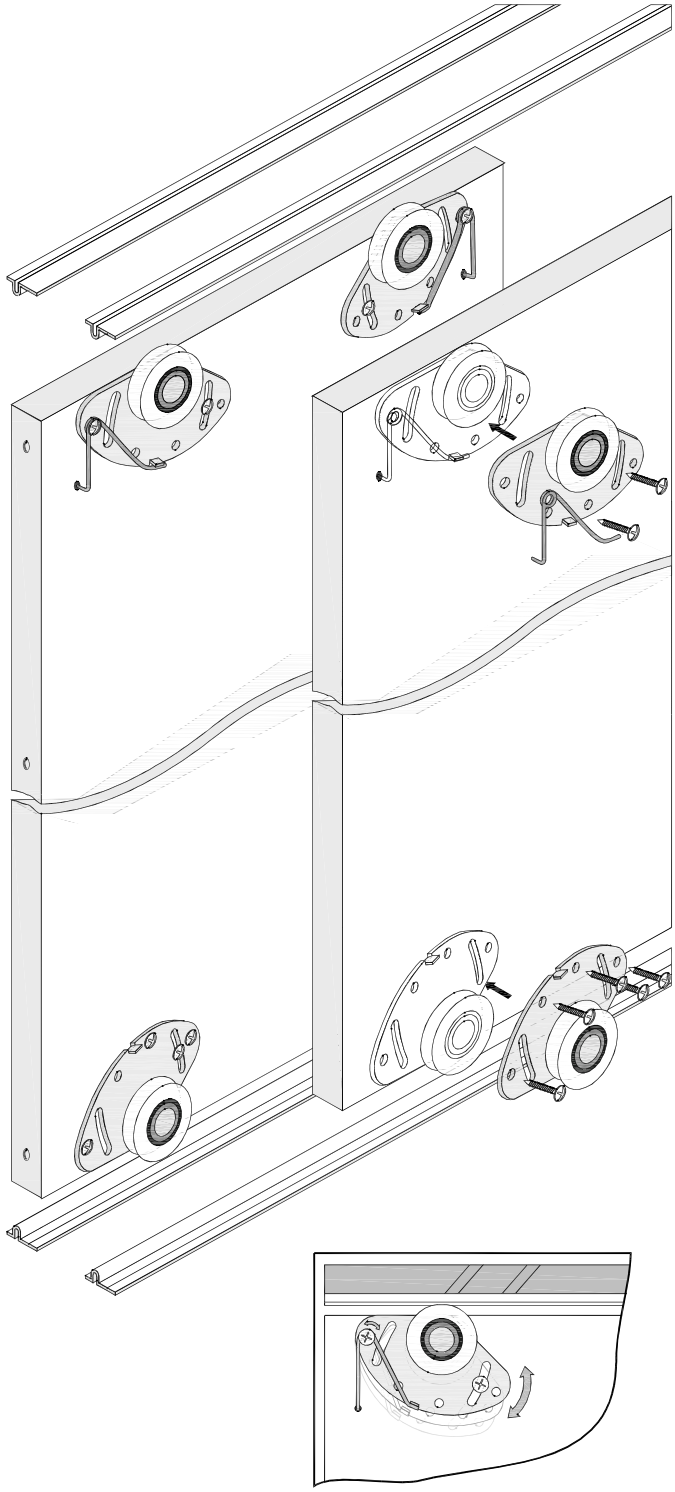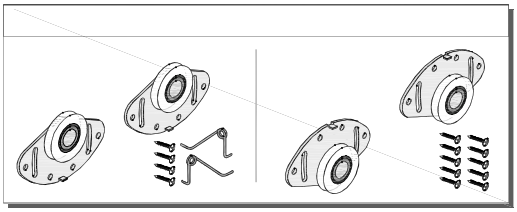
1
2
3