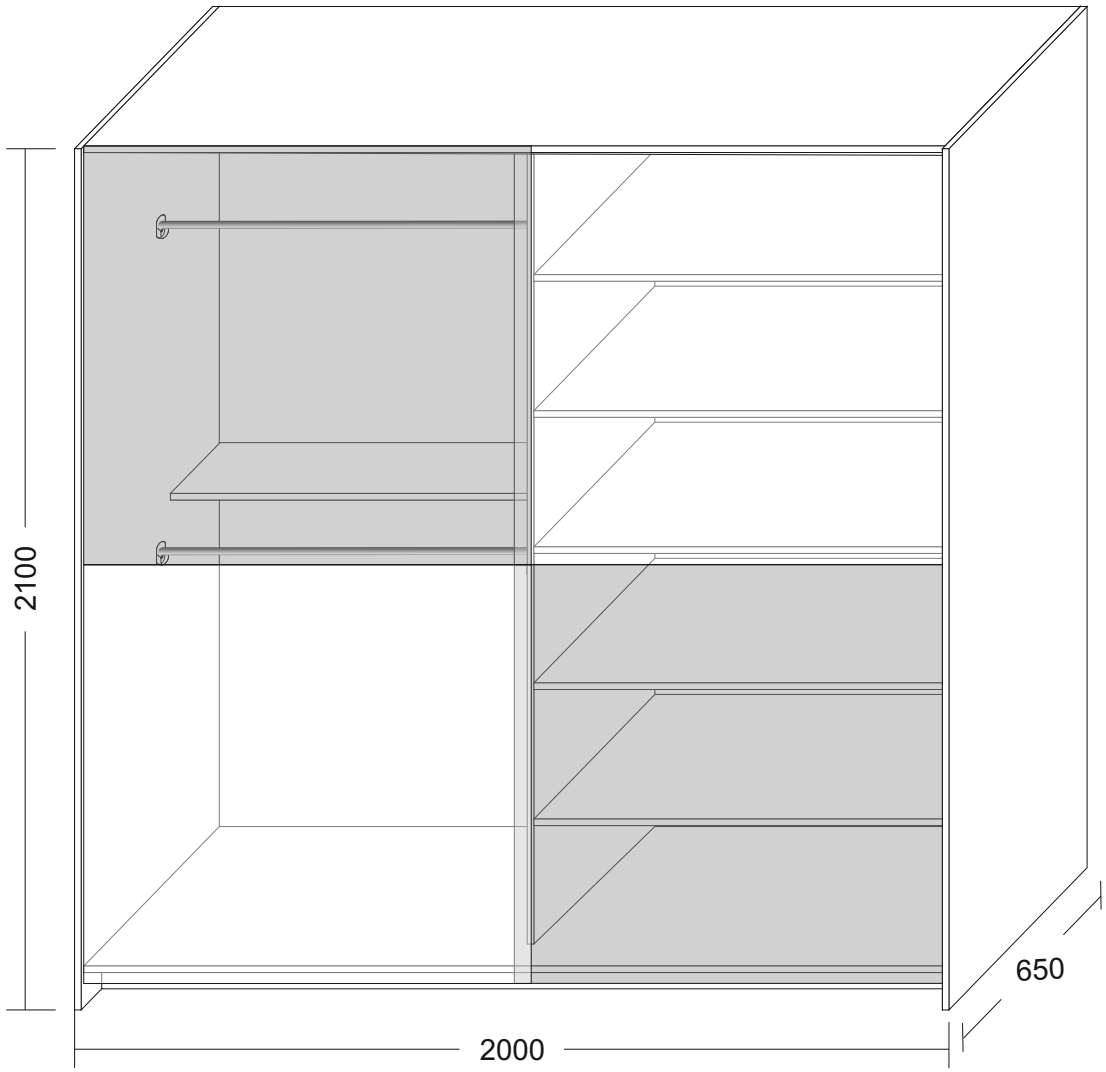
2100
2000
650

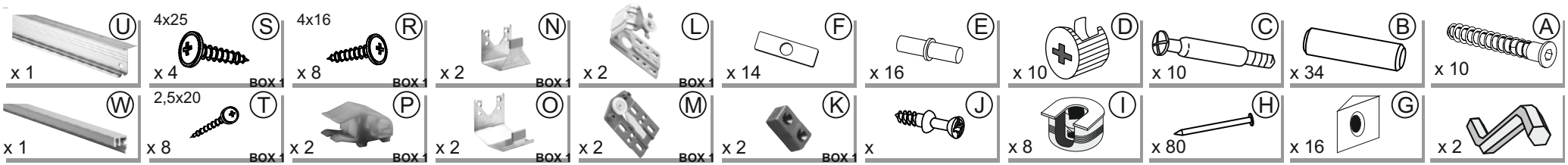
U x 1
4x25 S x 4 BOX 1
4x16 R x 8 BOX 1
N x 2 BOX 1
L x 2 BOX 1
F x 14
E x 16
D x 10
C x 10
B x 34
A x 10
W x 1
2,5x20 T x 8 BOX 1
P x 2 BOX 1
O x 2 BOX 1
M x 2 BOX 1
K x 2 BOX 1
J x
I x 8
H x 80
G x 16
x 2

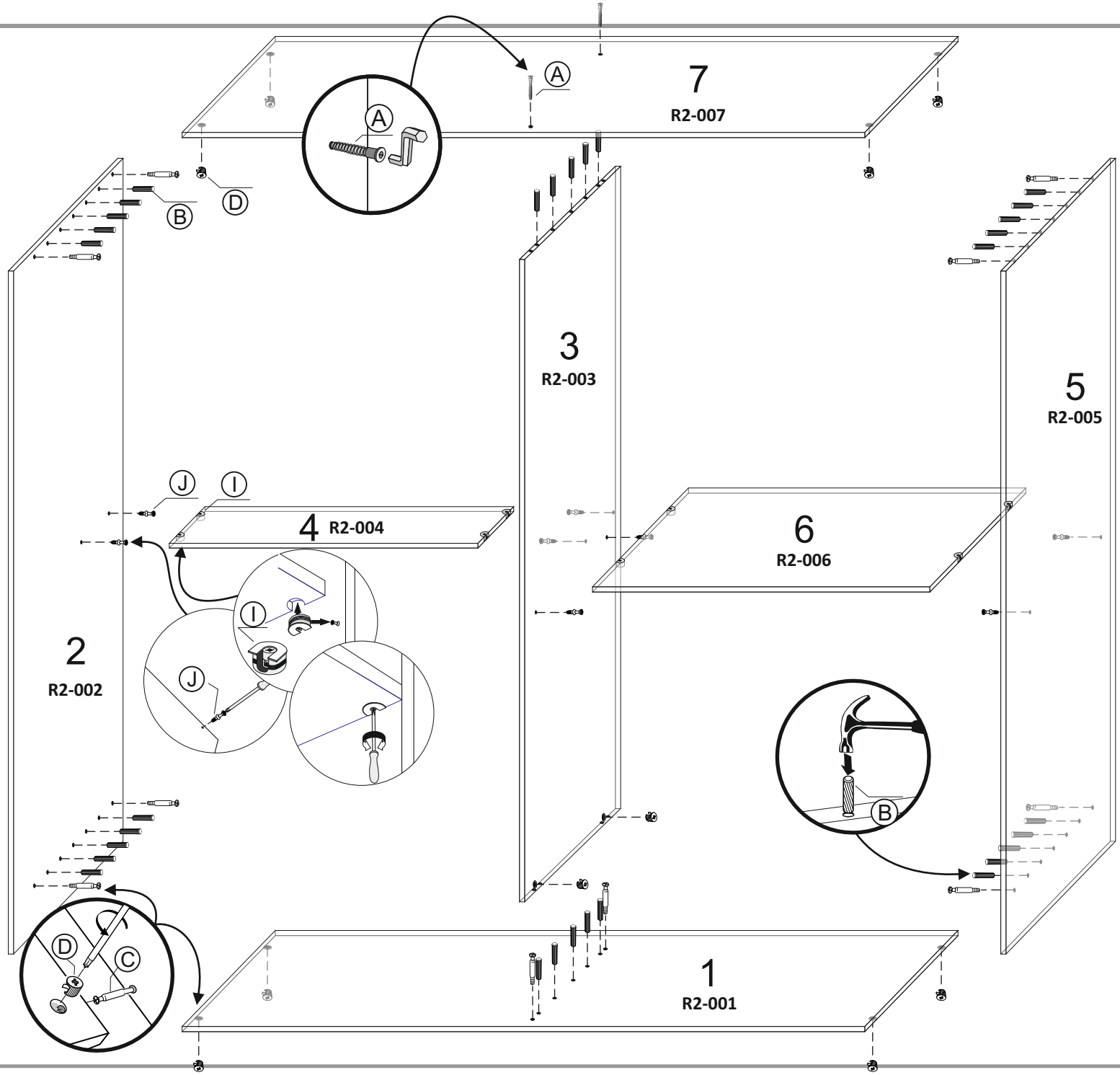
7
R2-007
A
A
B
D
3
R2-003
5
R2-005
J
I
4 R2-004
6
R2-006
I
J
2
R2-002
B
D
C
1
R2-001

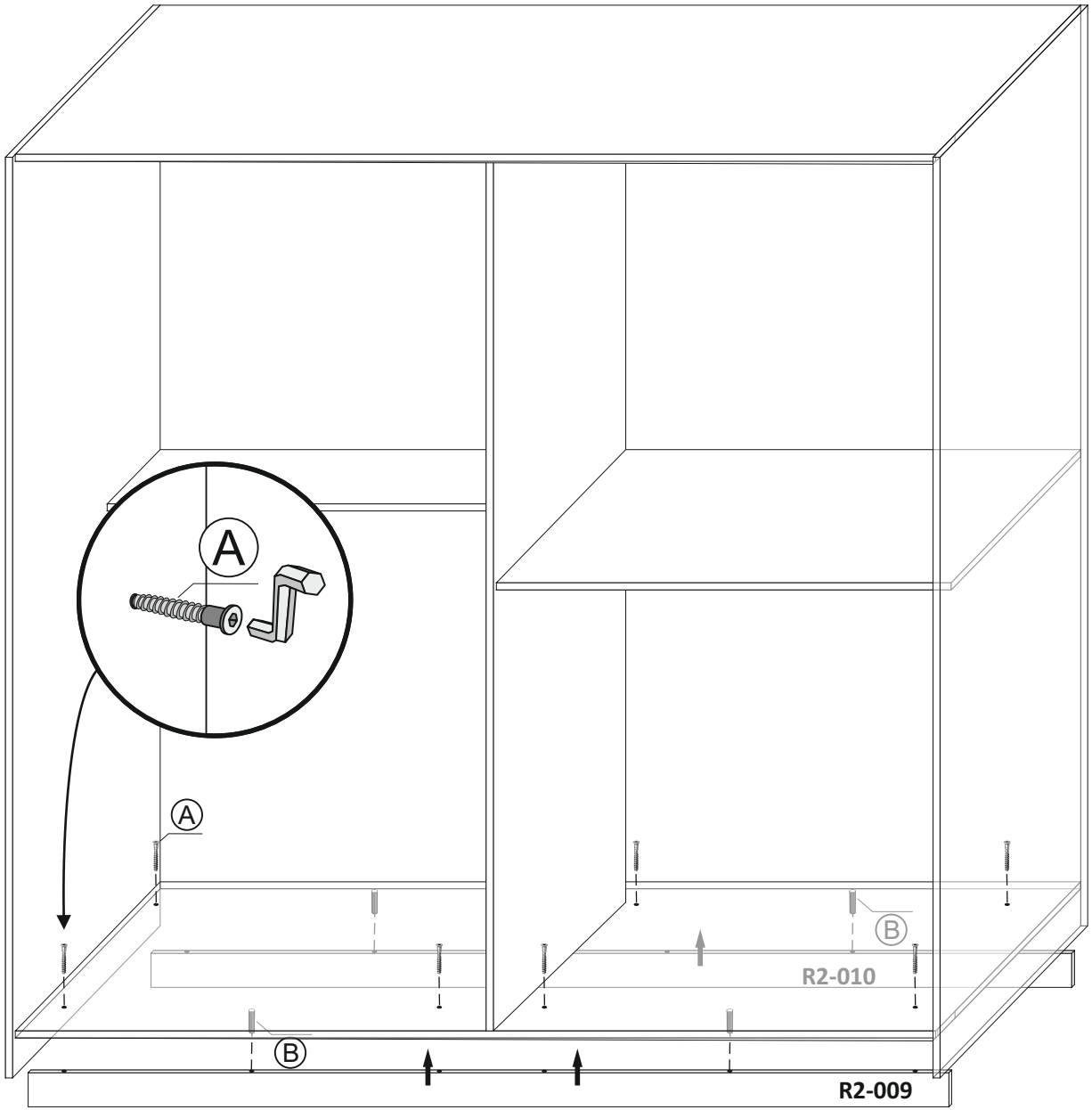
A
A
B
B
R2-010
R2-009

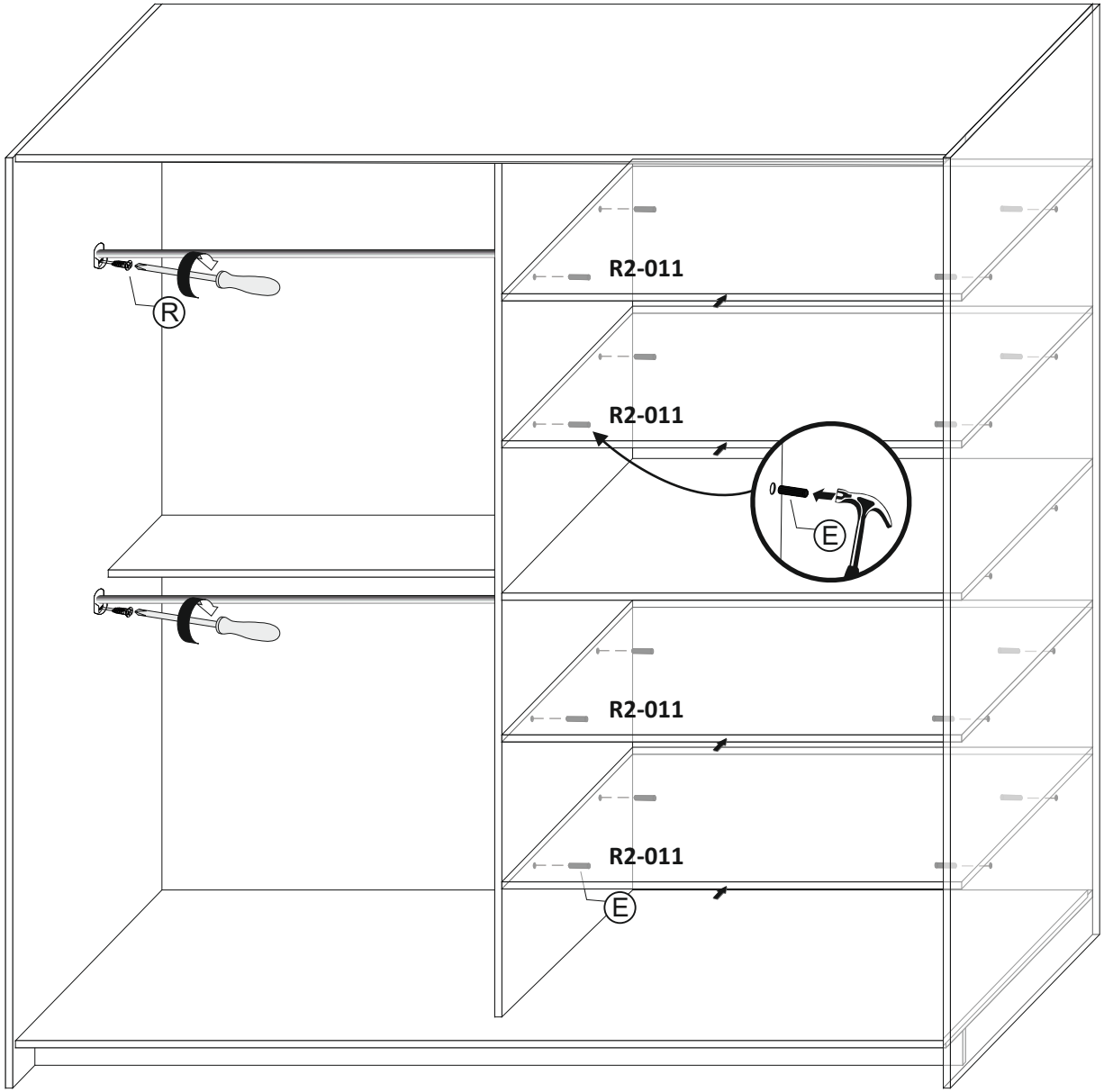
R
R2-011
R2-011
E
R2-011
R2-011
E

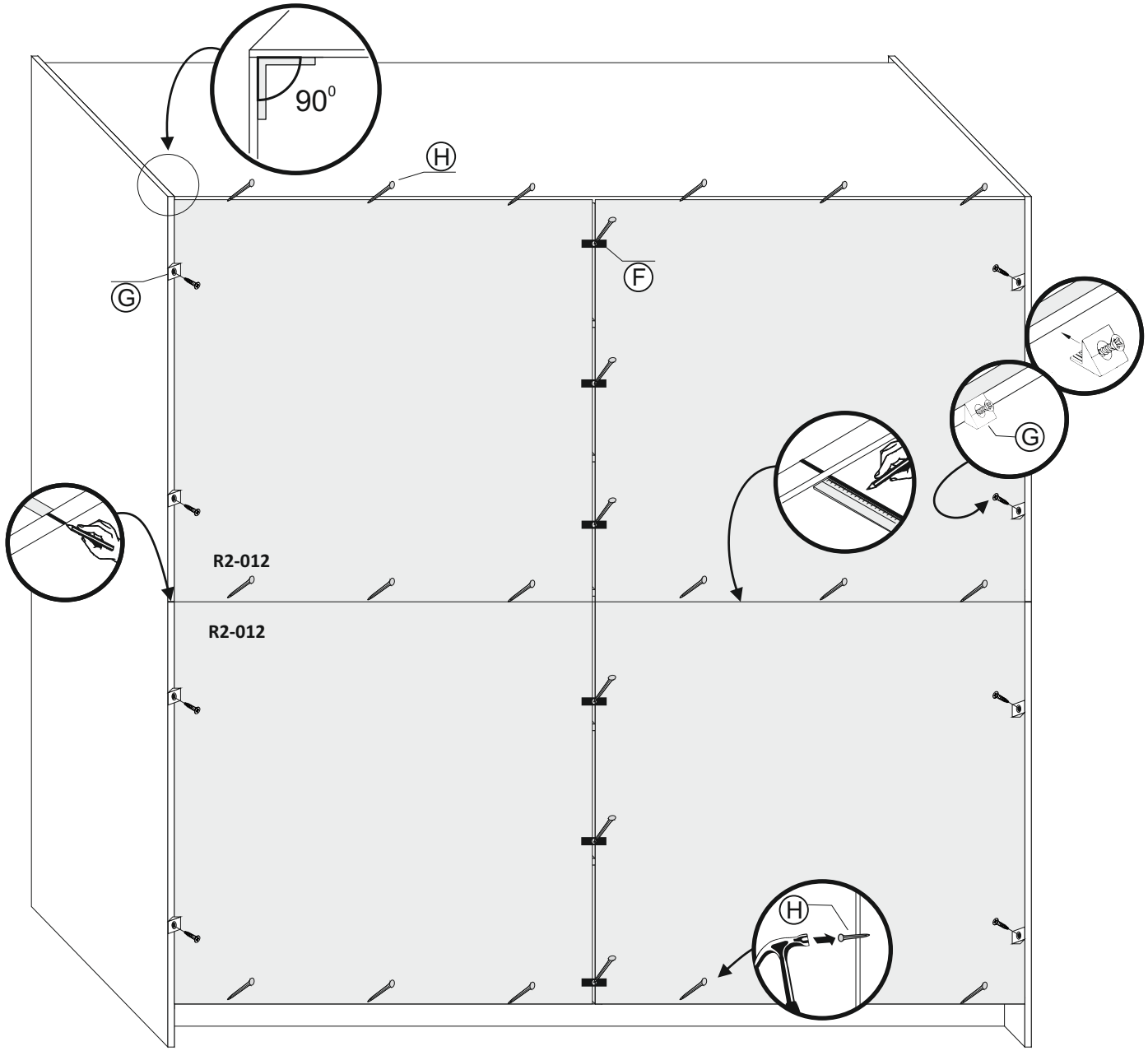
90⁰
H
G
F
G
R2-012
R2-012
H

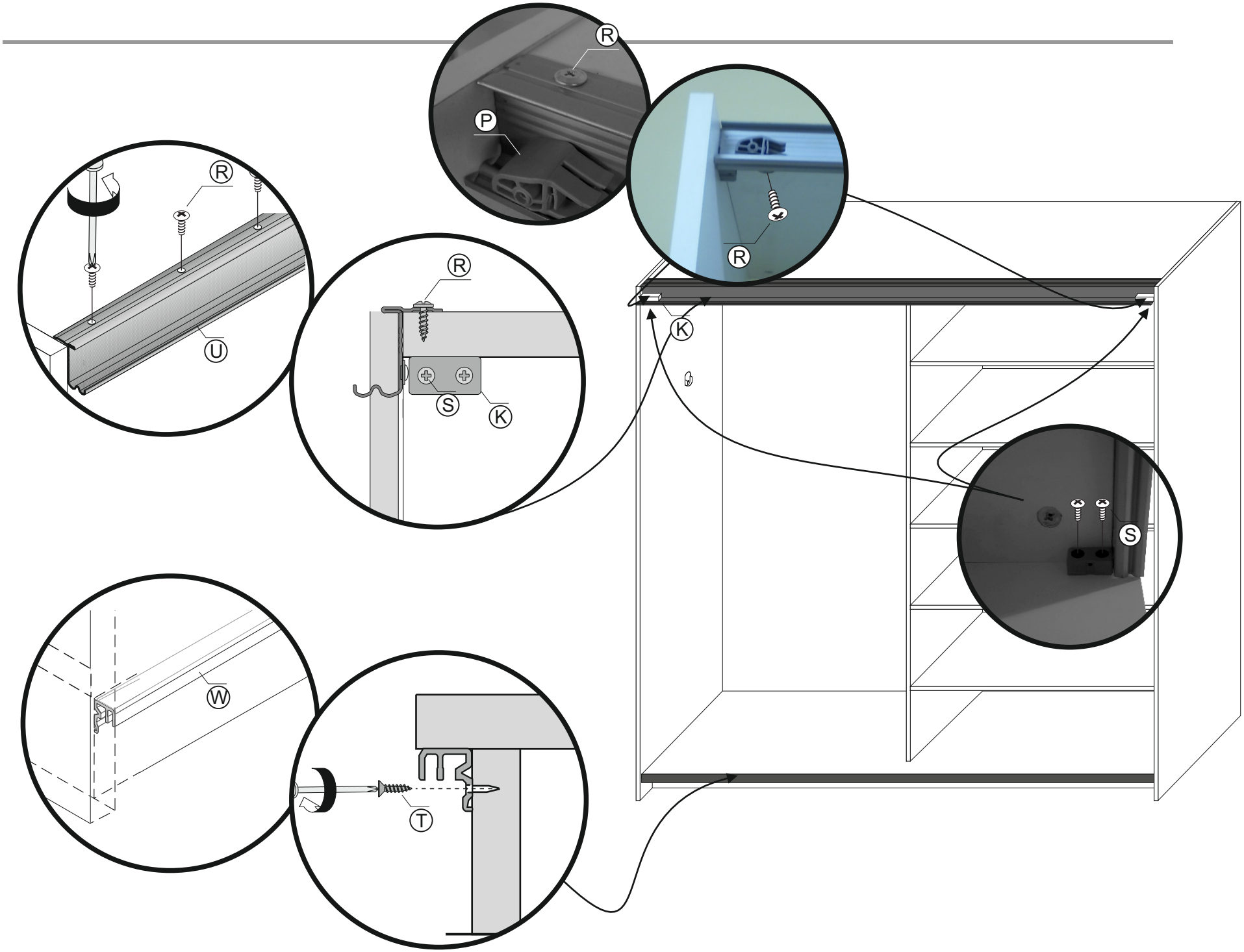
R
P
R
R
U
R
S
K
K
S
W
T

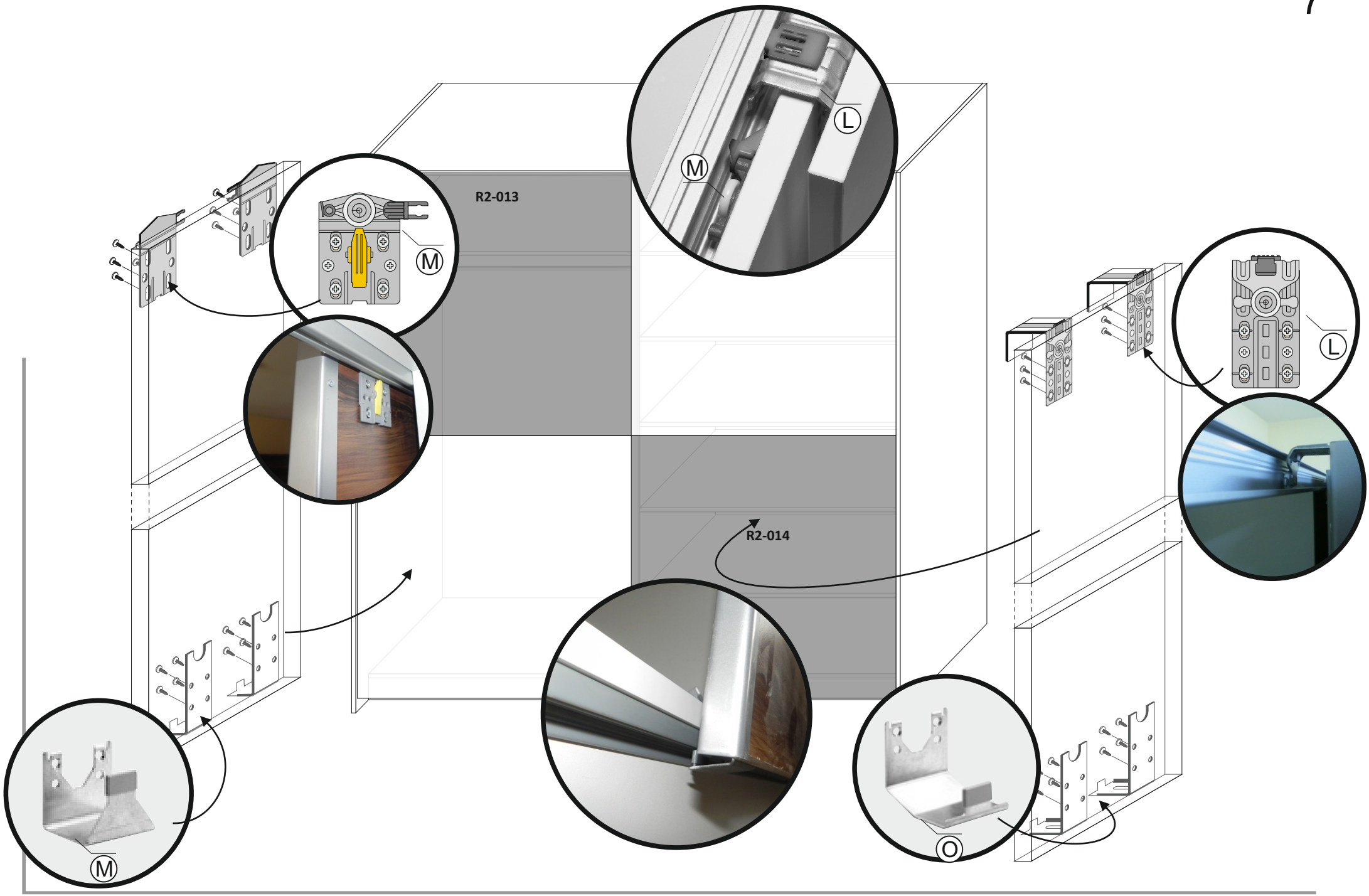
R2-013
R2-014
M
M
M
L
L
O